EP486 Microcontroller Applications

Topic 5

LED, LDR, RGBLED, LM35, LCD

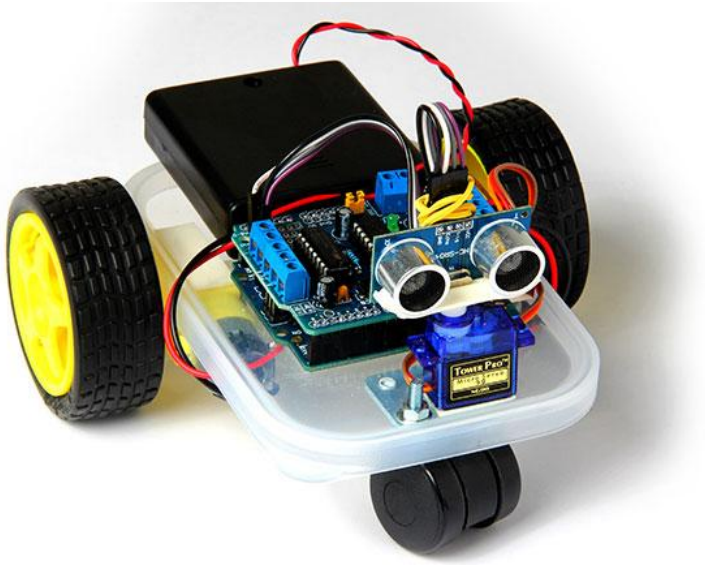

Department of Engineering Physics

University of Gaziantep

Nov 2013

LED & LDR

- Here, we will use a Light Dependent Resistor (LDR) .
- The aim is to make a simple children's bedroom nightlight which *turns on automatically when it gets dark and turns off when it gets light*.

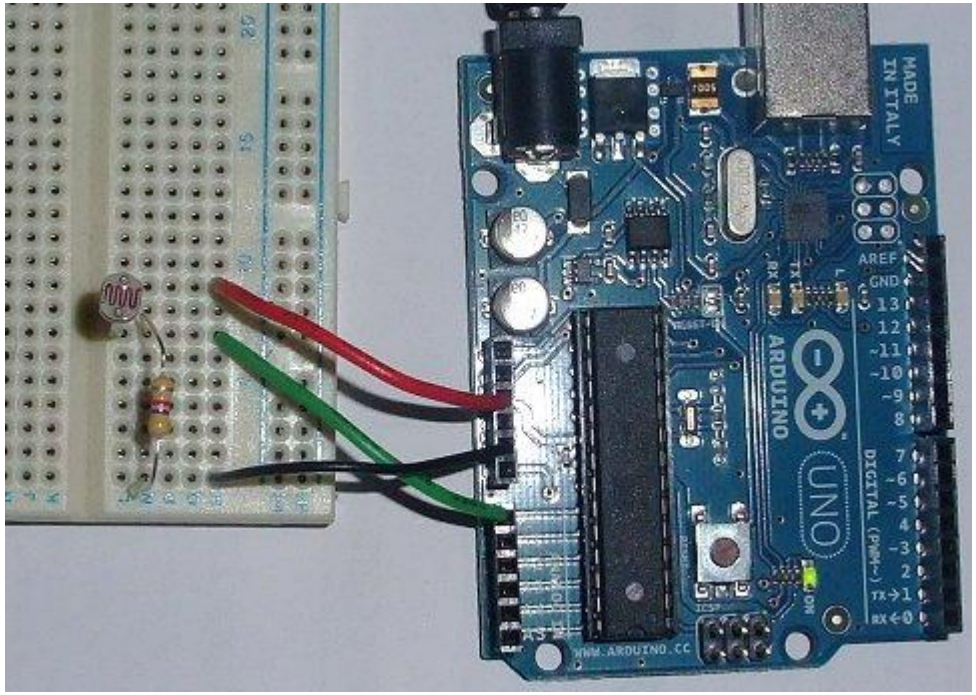

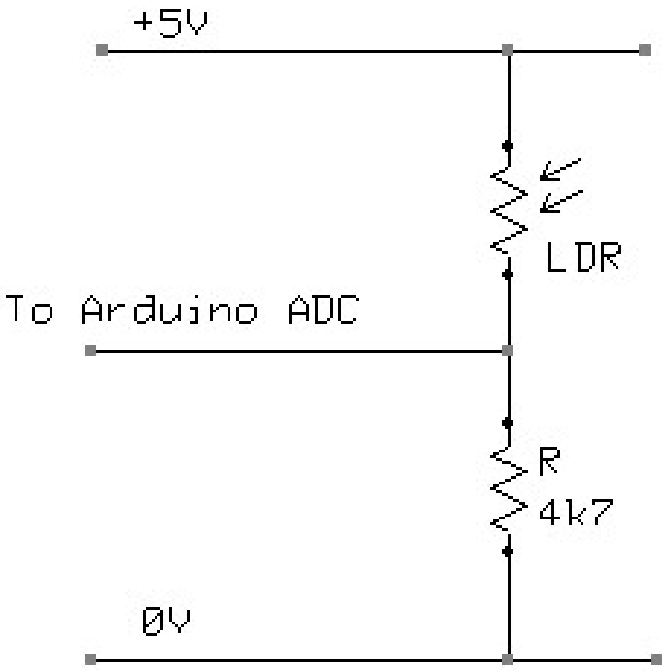

LED & LDR (code)

```
int sensorValue = 0;

void setup(){
  pinMode(13, OUTPUT);
  Serial.begin(9600);
}

void loop(){
  sensorValue = analogRead(A0);
  if(sensorValue<50) digitalWrite(13, HIGH);
  else               digitalWrite(13, LOW);
  //For debugging
  //Serial.println(sensorValue);
  //delay(50);
}
```

RGB LED

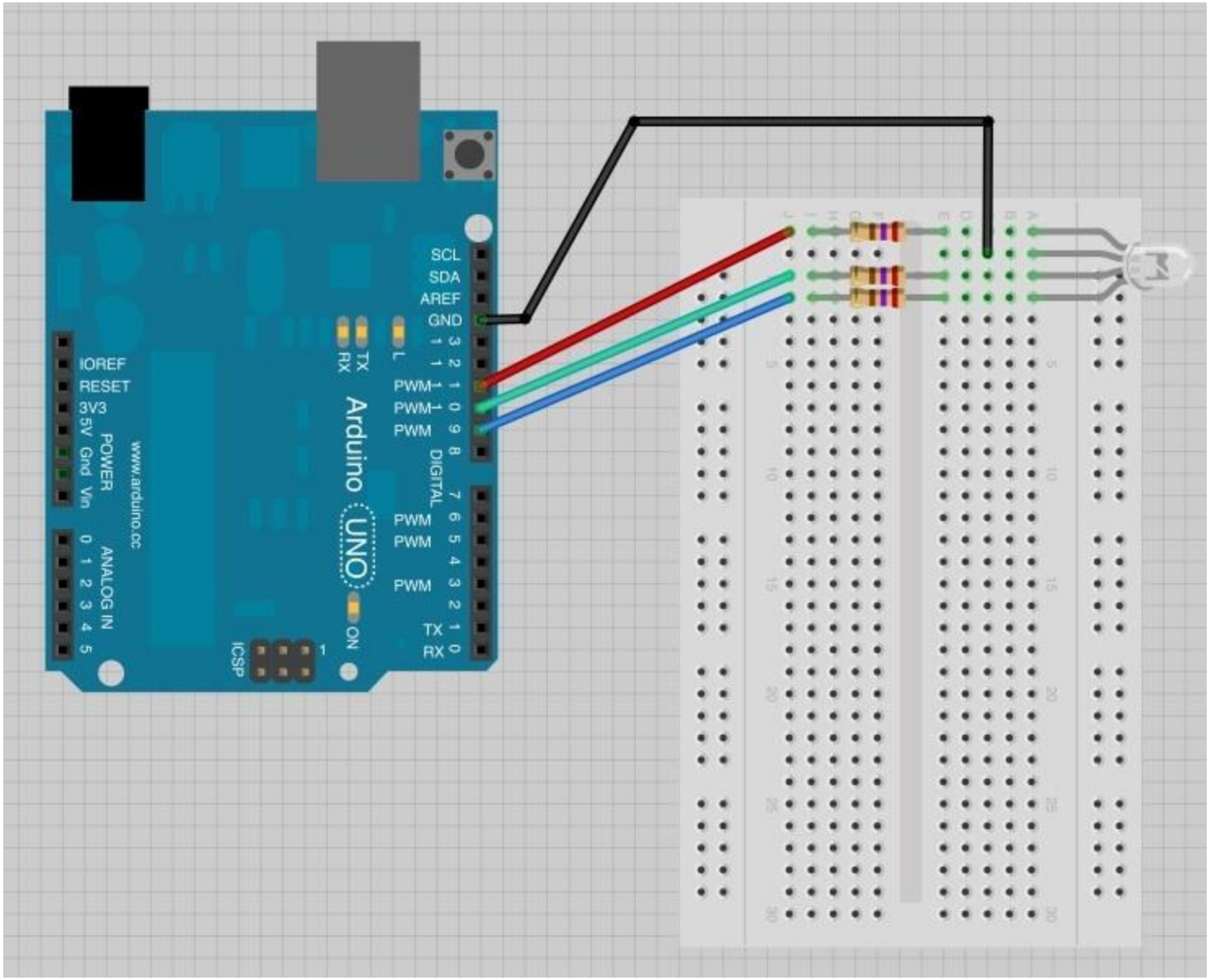
SCL
SDA
AREF
GND
13
12
~11
~10
~9
8
DIGITAL
7
~6
~5
4
~3
2
TX 1
RX 0
L
TX
RX
Arduino
UNO
ON
ICSP
1
IOREF
RESET
3V3
5V
Gnd
Gnd
Vin
POWER
ANALOG IN
A0
A1
A2
A3
A4
A5
www.arduino.cc

RGB LED (code)

```
int redPin   = 11; // RGBLED must be connected to PWM pins!
int greenPin = 10;
int bluePin  =  9;

void setup (){
  pinMode (redPin,   OUTPUT);
  pinMode (greenPin, OUTPUT);
  pinMode (bluePin,  OUTPUT);
}

void loop(){
  color(255, 0, 0); delay(1000); // red
  color(0, 255, 0); delay(1000); // green
  color(0, 0, 255); delay(1000); // blue

  /* blended colors */
  color(192, 97, 59);
  delay(1000);
  color(random(255), random(255), random(255));
  delay(1000);
}

// The color generating function
void color (unsigned char R, unsigned char G, unsigned char B){
  analogWrite(redPin,   255-R);
  analogWrite(greenPin, 255-G);
  analogWrite(bluePin,  255-B);
}
```

Temperature measurement with LM35

- The LM35 is a common TO-92 temperature sensor.
- If the middle leg is connected to analog A0 pin, one can compute the temperature (in oC) via the following appoximate equation:

```
T = (5.0 * analogRead(A0) * 100.0) / 1023;
  = 0.48828125 * analogRead(A0);
```

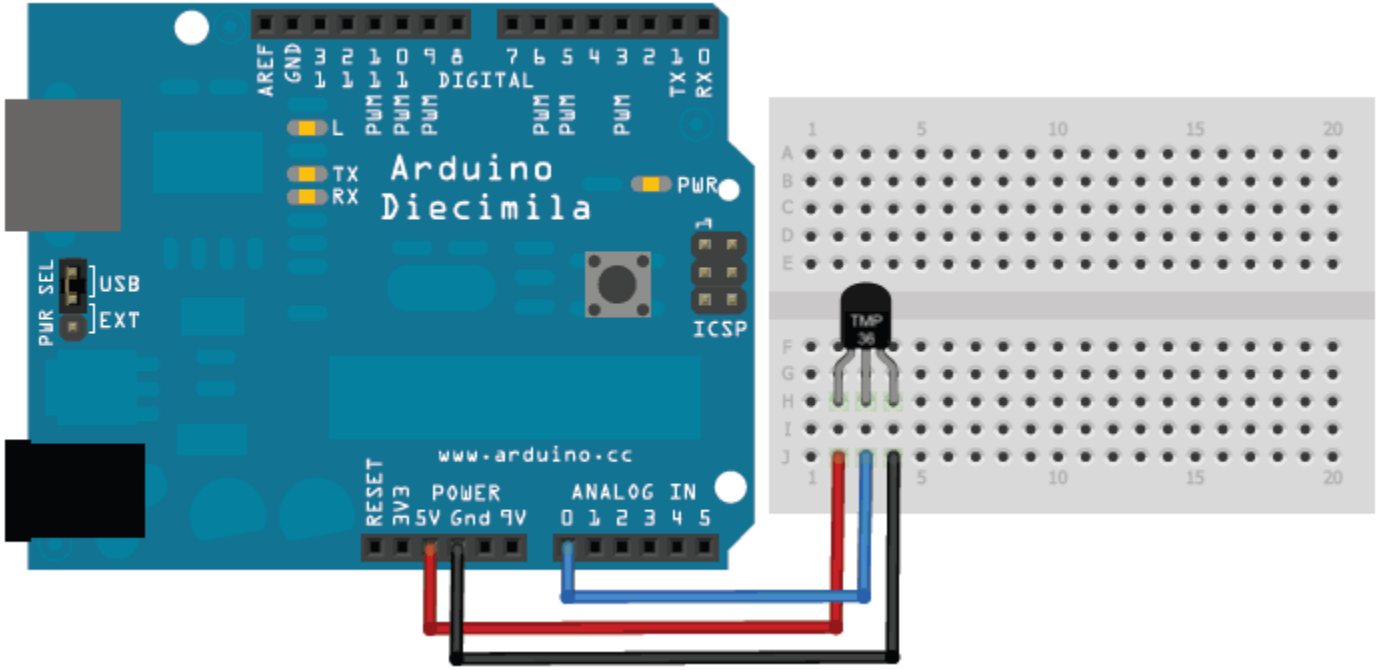

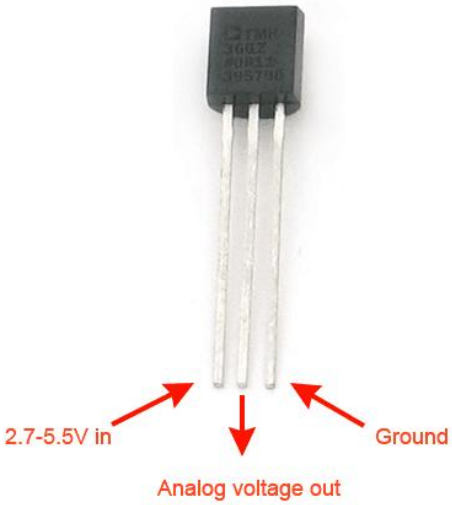

Temperature measurement with LM35 (code)

```
float T;

void setup(){
  Serial.begin(9600);
}

void loop(){
  T = 0.48828125 * analogRead(A0);
  Serial.print("TEMPRATURE = ");
  Serial.print(T);
  Serial.print(" oC");
  Serial.println();
  delay(1000);
}
```

Using LCD

- The LiquidCrystal library allows you to control LCD displays.

- http://arduino.cc/en/Tutorial/LiquidCrystal

Using LCD (circuit)

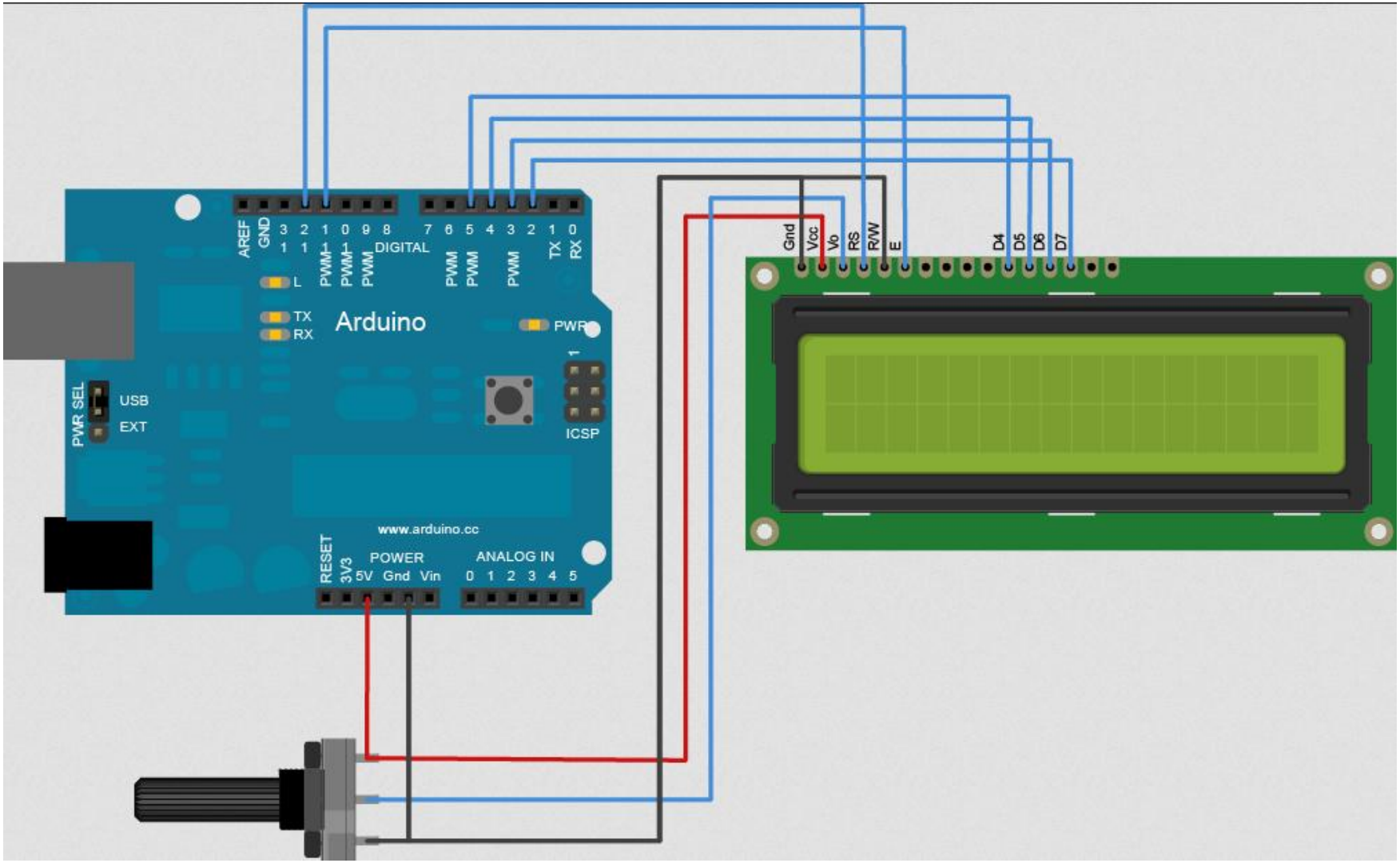

Using LCD (circuit)

- …

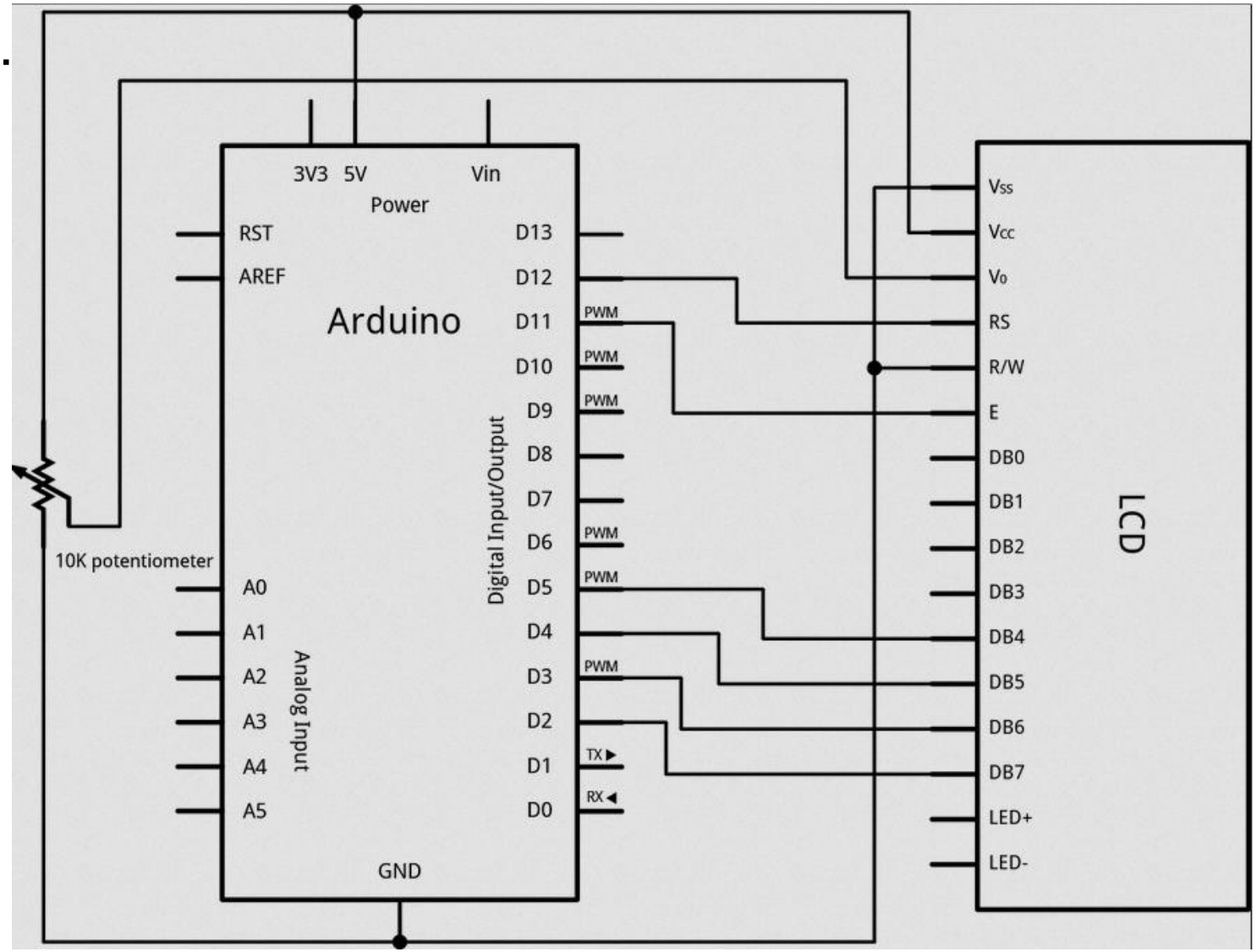

Using LCD (code)

```
// include the library code:
#include <LiquidCrystal.h>

// initialize the library with the numbers of the interface pins
LiquidCrystal lcd(12, 11, 5, 4, 3, 2);

void setup() {
  // set up the LCD's number of columns and rows:
  lcd.begin(16, 2);
  // Print a message to the LCD.
  lcd.print("hello, world!");
}

void loop() {
  // set the cursor to column 0, line 1
  // (note: line 1 is the second row, since counting begins with 0):
  lcd.setCursor(0, 1);
  // print the number of seconds since reset:
  lcd.print(millis()/1000);
}
```

Using LCD I2C

- With this I2C interface LCD module, you only need 2 lines (I2C) to display information.

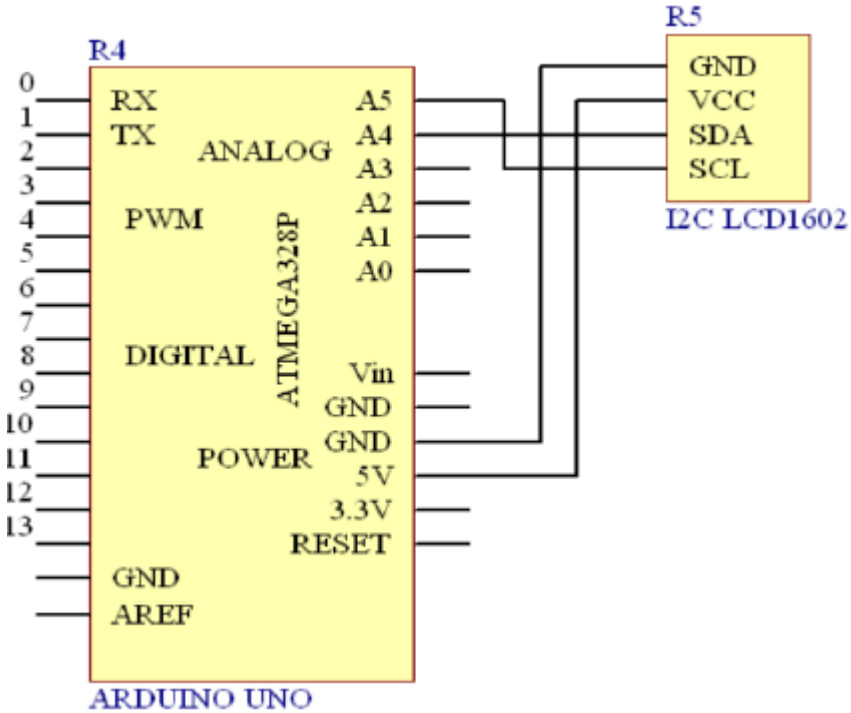

- Get the LCD I2C Library here:

https://bitbucket.org/fmalpartida/new-liquidcrystal/downloads

Using LCD I2C

- The code in the following page gives a result as follows:

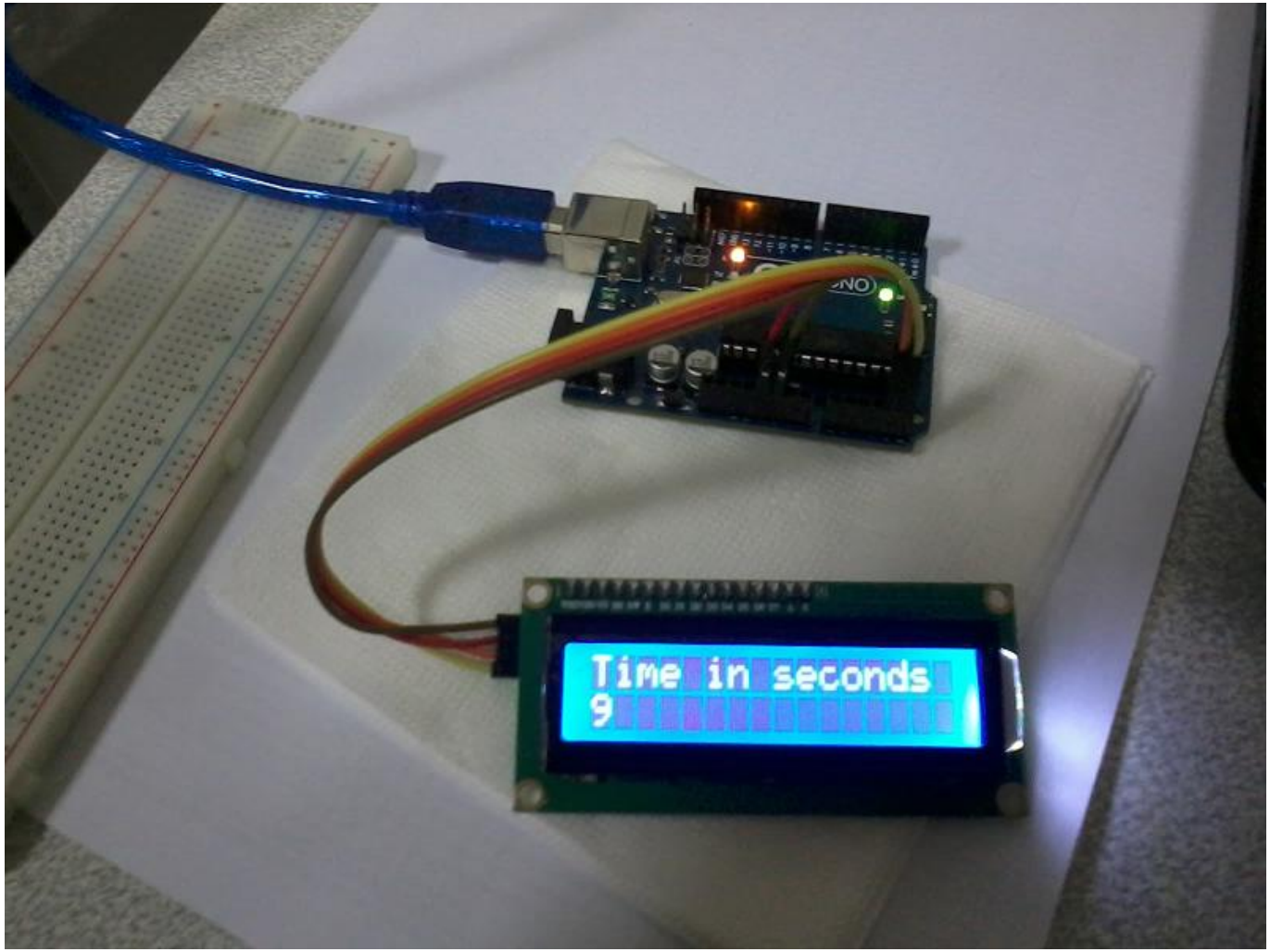

Using LCD I2C (code)


```
// http://arduino-info.wikispaces.com/LCD-Blue-I2C
// pin A4: SDA of LCD I2C
// pin A5: SCL of LCD I2C

#include <Wire.h>  // Comes with Arduino
#include <LiquidCrystal_I2C.h>

// Set the LCD I2C address
LiquidCrystal_I2C lcd(0x27, 2, 1, 0, 4, 5, 6, 7, 3, POSITIVE);

void setup(){
  Serial.begin(9600);
  lcd.begin(16,2);    // lcd for 16 chars 2 lines, turn on backlight
  lcd.setCursor(0,0); // Start at character 0 on line 0
  lcd.print("Hello World!");
  delay(3000);
  lcd.clear();
}

void loop(){
  lcd.setCursor(0,0);
  lcd.print("Time in seconds");
  lcd.setCursor(0,1); // Start at character 0 on line 1
  lcd.print(millis()/1000);
}
```

LM35 sensor & LCD I2C

- Now we can print the temperature value obtained by LM35 in the second example to LCD IC2. The result looks like:

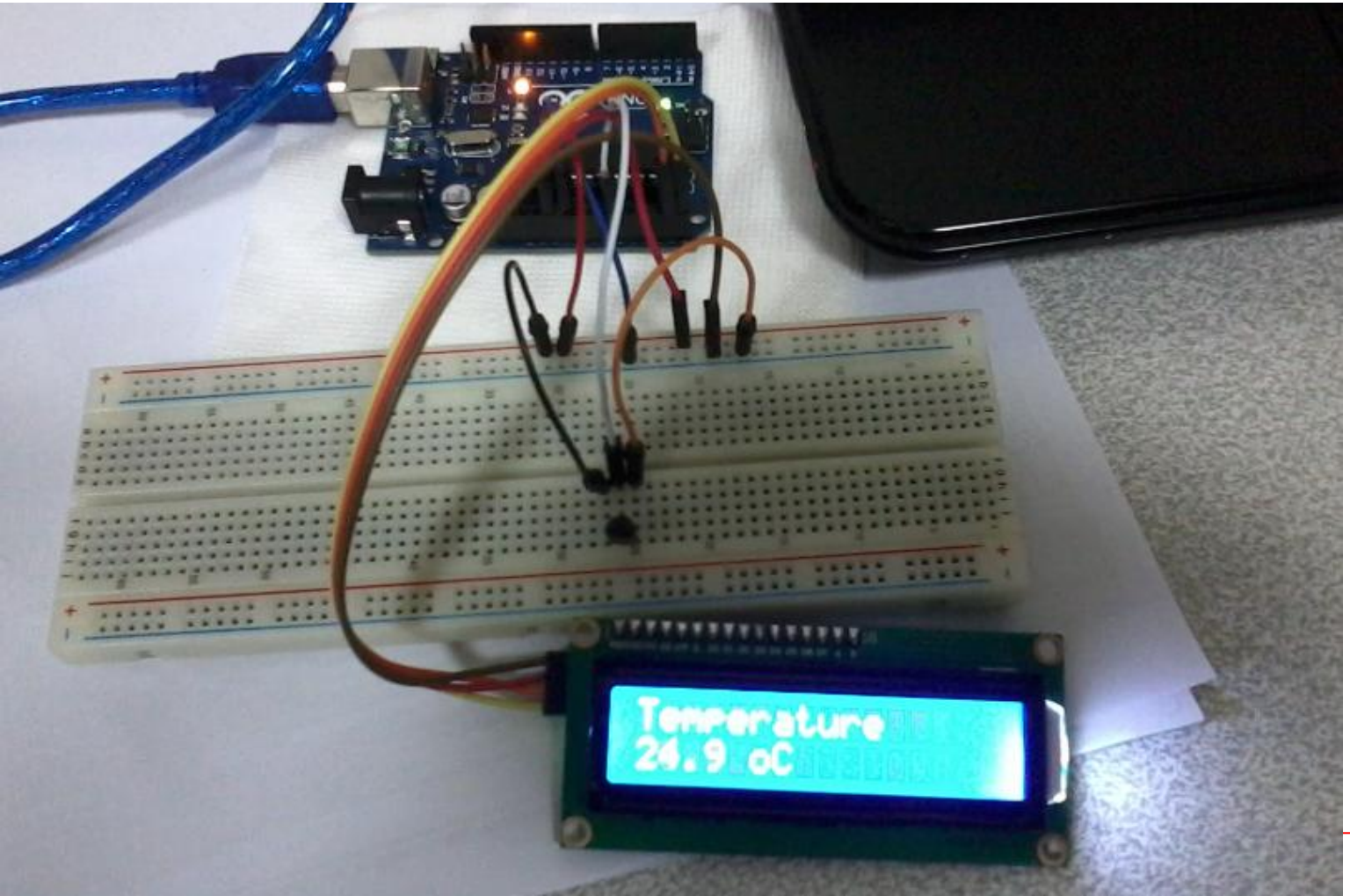

LM35 sensor & LCD I2C (code)

```
// pin A0 <---> LM35 middle pin
// pin A4 <---> SDA of LCD I2C
// pin A5 <---> SCL of LCD I2C

#include <Wire.h>
#include <LiquidCrystal_I2C.h>

LiquidCrystal_I2C lcd(0x27, 2, 1, 0, 4, 5, 6, 7, 3, POSITIVE);
float T;

void setup(){
 Serial.begin(9600);
  lcd.begin(16,2);    // lcd for 16 chars 2 lines, turn on backlight
  lcd.setCursor(0,0); // Start at character 0 on line 0
  lcd.print("Temperature");
}

void loop(){
  T = 0.48828125 * analogRead(A0); // Read the temperature
  lcd.setCursor(0,1); // Start at character 0 on line 1
  lcd.print(T,1);
  lcd.print(" oC");
  delay(1000);
}
```