EP486 Microcontroller Applications

Topic 7

Microphone & Remote control

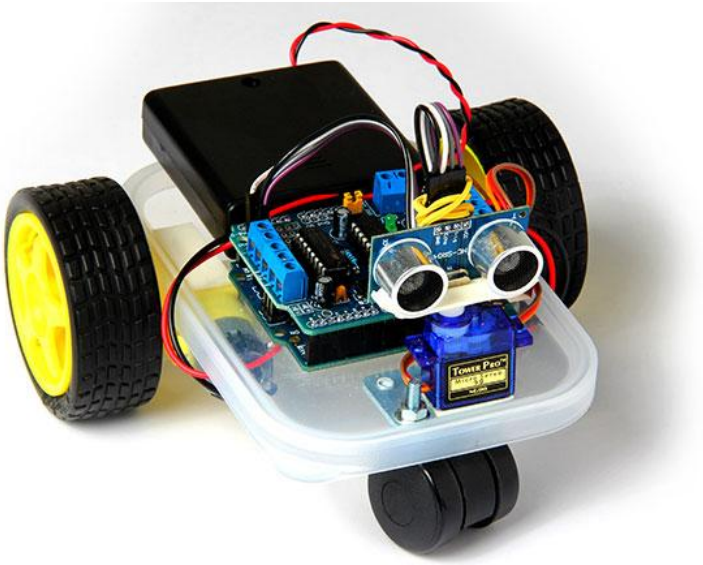

Department of Engineering Physics

University of Gaziantep

Nov 2013

Microphone

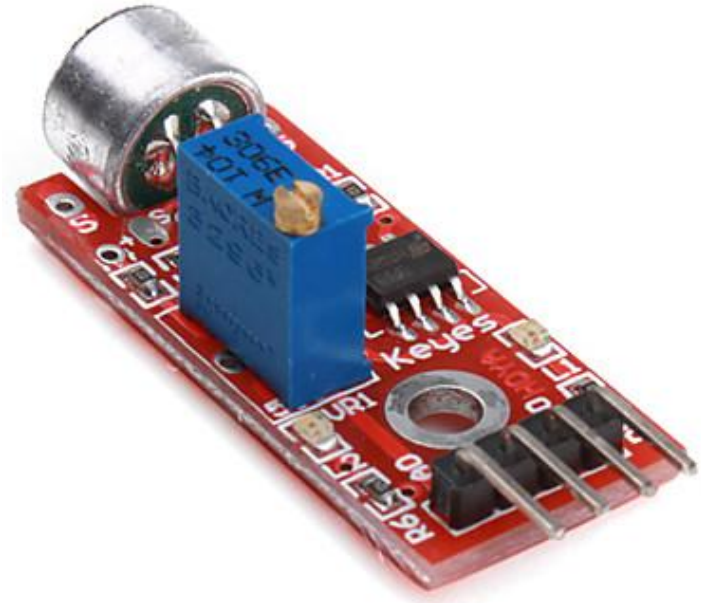

- This sound module is very cheap!

- It is not good at determining sound levels!

- **DO**: digital output gives an output 0 or 1. *You can set the threshold physically by turning the screw on the top*.

- **AO**: analog output is not amplified at all. To use it, you need to pair it with a pre-amp. The values are in the range [0,1023].

Microphone (code)

```
// pin connections
//   5V <--> +
// GND <--> G
//   12 <--> DO
int mic = 12;
int newval, oldval=-1;

void setup(){
  Serial.begin(9600);
  pinMode(mic, INPUT);
}

void loop(){
  newval = digitalRead(mic);  // gives 0 or 1
  if(oldval != newval){
    Serial.println(newval);
  }
  oldval = newval;
  delay(1);   // delay in between reads for stability
}
```

Infrared Remote Control

- NAME is a simple IR reciver.
- You can use the IRemote library:

```
#include <IRremote.h>
```

- Dowload it from course webpage.
- There are some examples.

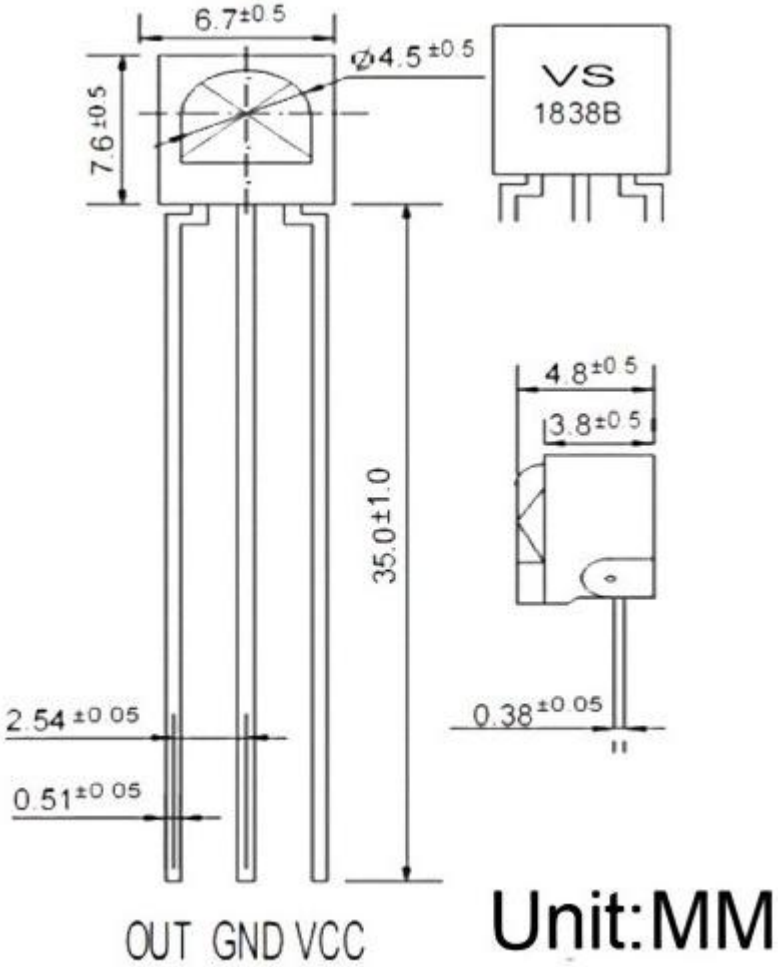

IR Remote Control (code 1)

```
// Prints the value from the remote control unit
#include <IRremote.h>
int RECV_PIN = 11;
IRrecv irrecv(RECV_PIN);
decode_results results;

void setup(){
  Serial.begin(9600);
  irrecv.enableIRIn(); // Start the receiver
}

void loop() {
  if (irrecv.decode(&results)) {
    Serial.println(results.value, HEX);
    irrecv.resume(); // Receive the next value
  }
}
```

IR Remote Control (code 2)

```
// Turns on  the led if you press 1
// Turns off the led if you press 2
#include <IRremote.h>
int RECV_PIN = 11, led = 13;
IRrecv irrecv(RECV_PIN);
decode_results results;

void setup(){
  Serial.begin(9600);
  irrecv.enableIRIn(); // Start the receiver
}

void loop() {
  if (irrecv.decode(&results)) {
    Serial.println(results.value, HEX);
    if(results.value==0xFF30CF) digitalWrite(led, HIGH);
    if(results.value==0xFF18E7) digitalWrite(led, LOW);
    irrecv.resume(); // Receive the next value
  }
}
```

IR Remote Control (code 3)

```
// Sending IR data (you need a IR led)
#include <IRremote.h>

IRsend irsend;
int irLed = 12;

void setup(){
  Serial.begin(9600);
}

void loop(){
 if (Serial.read() != -1) {
  for (int i = 0; i < 3; i++) {
    //irsend.sendSony(0xa90, irLed); // Sony TV power code
    irsend.sendNEC(0xA00FF, irLed);  // NEC TV power code
    delay(40);
  }
 }
}
```